RoHS Pb Lead-free

TEL:0769-82285488

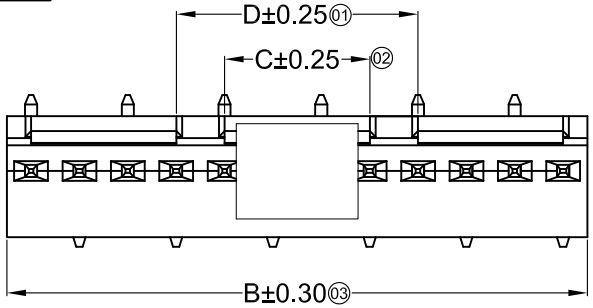

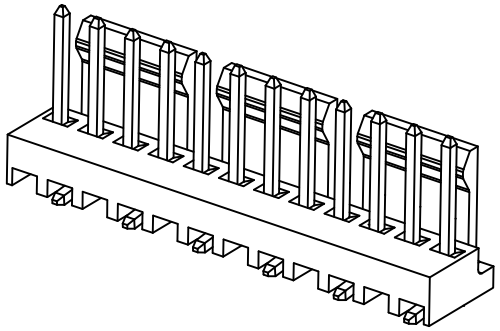

■ Specifications :

- Voltage rating: 250V AC / DC
- Current rating: 4A AC / DC
- Withstanding voltage: 800V AC/minute
- Temperature range: -25°C~+85°C
- Insulation resistance:≥1000MΩ
- Contact resistance: ≤10mΩ
- After environmental testing: ≤20mΩ

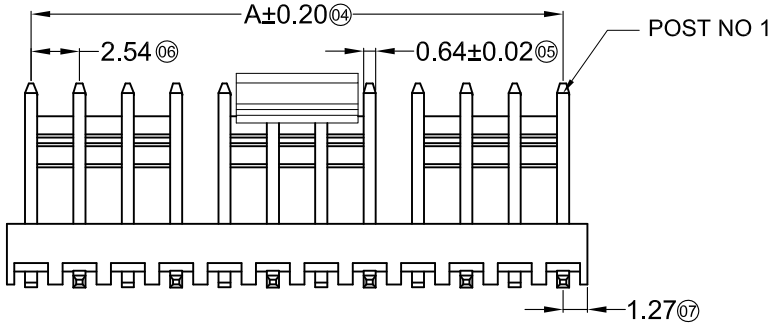

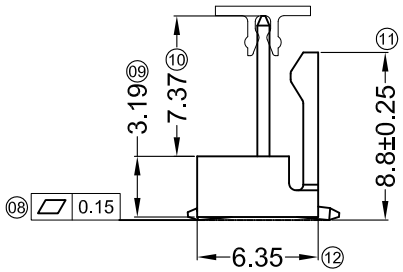

2511 W V S- XX SC-LP SW XX
01 02 03 04 05 06 07 08 09

01 Series No.
02 Category: W-wafer
03 Welding Board Angle: V-180°
04 Welding Way: S-SMT
05 Row No.-Pin No. XX-Single row
06 Special NO. SC-short back and with slot
07 Material: LP-LCP 94V-0
08 Planting Category: SW-Matte Tin plating
09 Color: Blank-natural color ;

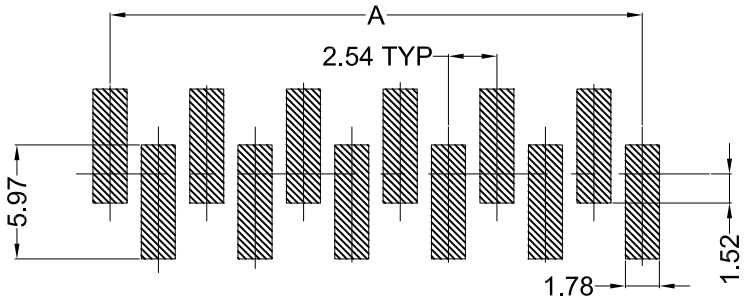

Recommended P.C.B Layout
General Tolerance±0.05

Poles	Dimensions(mm)				Poles	Dimensions(mm)			
	A	B	C△	D△		A	B	C△	D△
02	2.54	5.08			12	27.94	30.48	7.62	12.70
03	5.08	7.62			13	30.48	33.02	7.62	15.24
04	7.62	10.16			14	33.02	35.56	12.70	17.78
05	10.16	12.70			15	35.56	38.10	12.70	20.32
06	12.70	15.24			16	38.10	40.64	12.70	22.86
07	15.24	17.78			17	40.64	43.18	12.70	25.40
08	17.78	20.32		2.54	18	43.18	45.72	12.70	27.94
09	20.32	22.86		5.08					
10	22.86	25.40		7.62					
11	25.40	27.94		10.16					

PART N0	Material	Material(Pin)	Finish(Pin)	Mates With ADZL Housing
2511WVS-XXSC-LPSW	LCP UL 94V-0 Black	Brass	Matte Tin Plating	2511H

DATE	OLD REV	NEW REV	ECN	DESCRIPTION	CHECK	APPROVAL

GENERAL TOLERANCE
.X ±0.30
.XX ±0.20
.XXX ±0.10

PROJECT

思量连接器有限公司
ADZL CONNECTORS CO.,LTD

APPROVAL	CHECK	DRAWN	DATA
Ken	Wisely He	Allen	2017/05/03

PART NO. 2511WVS-XXSC-LPSW

TITLE 2.54mm Crimp Style Connectors

UNIT	SCALE	NUMBER	REV
MM	1 : 1	A-000	G